Aertesi airpower

ZEFIRO

HYDRONIC FAN COIL



SOMETHING DIFFERENT

GB



ZEFIRO

HYDRONIC FAN COIL

The Zefiro fan coil is the product of decades of experience in the field of hydronic terminals and offers technical solutions based on all the feedback from users, installers and designers who over the years have contributed to making this a feature-packed, complete product.

Special attention has been given to ensuring easy installation, thanks to the interlocking construction of the sides of the cabinet.

The stylish design, low-noise operation, versatility, quality components and the wide range of accessories make this fan coil an excellent product for heating and cooling any residential and commercial environment.
The Zefiro series is Eurovent certified and is produced in accordance with the applicable regulations on safety.

EASY DRAINAGE

AUXILIARY TRAY IN ABS TILTED TO AN ANGLE TO FACILITATE CONDENSATE DRAINAGE AND PREVENT STAGNATION, INCLUDED IN THE STANDARD EQUIPMENT AND INSTALLED UNDER THE VALVES.

REVERSIBLE

THE "HDP" ACCESSORY ALLOWS A VERTICAL UNIT TO BE CONVERTED FOR INSTALLATION IN THE HORIZONTAL DIRECTION.

LOW-NOISE

THE USE OF AN EC MOTOR ALLOWS LOWER NOISE EMISSIONS TO BE OBTAINED COMPARED TO TRADITIONAL MOTORS, REACHING EXTREMELY LOW SOUND POWER VALUES.

FUNCTIONAL CABINET

COVER CABINET WITH 2 SIDES EASILY REMOVABLE INDEPENDENTLY FROM THE REST OF THE UNIT.

BMS COMPATIBLE

POSSIBILITY OF CONTROLLING UP TO 240 UNITS WITH OUR TOP3-BMS MODBUS PROTOCOL MULTIFUNCTIONAL DIGITAL THERMOSTAT, ALSO IN COMBINATION WITH ALL AERTESI TERMINAL UNITS.

ADVANCED CONTROL

ADVANCED CONTROL ENABLES TO MANAGE MASTER/SLAVE COMBINATIONS OF UP TO 24 UNITS AND TO USE WALL MOUNTED OR REMOTE CONTROLS.

EC MOTOR

ENERGY SAVINGS FROM 45% TO 65% COMPARED TO TRADITIONAL MOTORS - DEPENDING ON THE TYPE AND METHOD OF USE.
THE EC MOTOR USED IS OF THE BRUSHLESS TYPE CONTROLLED BY A 0-10 VDC SIGNAL WITH VERY LOW POWER CONSUMPTION.



COOLING
0.6/10.7 kw

HEATING
0.6/11.7 kw

AIR FLOW
81-2211 m³/h

CONSUMPTION REDUCED UP TO
67%

Aertesi airpower

I.A.Q. PURIFICATION AND SANITIZATION SYSTEM

Aertesi makes certified technologies and devices available with demonstrated reduction capacity of the microbial load of different bacterial strains, including virucidal activity against COVID-19.

SANI FAN for sanitising fan-coil internal surfaces with Bioxigen® technology.

BIOXAIR for sanitising aeraulic ducts with Bioxigen® technology.

FILTRASAN fibre suitable for filtering media which retains and removes microorganisms present in the air. Sanitized technology.

VERSIONS WITH CABINET



VA

Vertical and horizontal with adjustable grilles.



VB

Vertical and horizontal with front intake and front filter removal. Adjustable grilles.



HA



HB

LOW ZEFIRO

LOWERED-HEIGHT VERSION

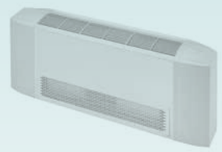

VL

Vertical and horizontal. Adjustable grilles.



HL



IDENTIFICATION MODEL

ZE	628	VA	DX*	SATH	EC
MODEL	SIZE	VERSION	CONNECTION SIDE	ACCESSORIES	MOTOR

DX: RIGHT-HAND - SX: LEFT-HAND - FRONT, AIR DELIVERY - *** STANDARD CONNECTION ON THE RIGHT**

VERSIONS WITHOUT CABINET



VC



VD



VE



HC



HD



VF

Vertical or horizontal recessed installation with variable intake.

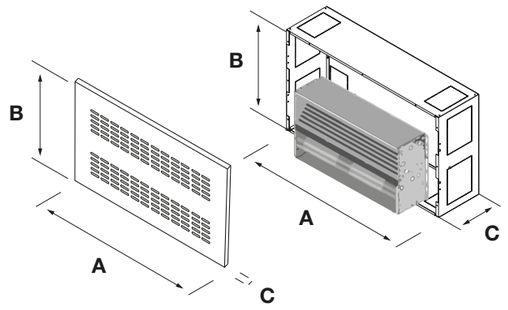

CCM + MPK-VF OUTER CASING AND PANEL FOR ZEFIRO VF

The CCM + MPK kit for floor installation includes a sturdy sheet metal outer casing that allows hydraulic and electrical systems to be fitted on site; the fan coil is then installed at a later stage as works progress. The installation is completed by a stylish 2 mm thick panel fixed to the outer casing. RAL colours can be customised on request for an extra fee.

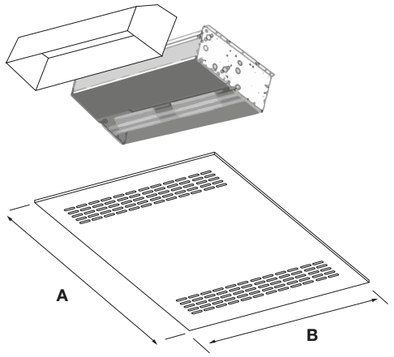

MPK-HD PANEL FOR ZEFIRO HD

External metal panel for horizontal Zefiro HD + 90° DELIVERY PLENUM (without insulation).

ZEFIRO
WITH CABINET

VA - VB - HA - HB

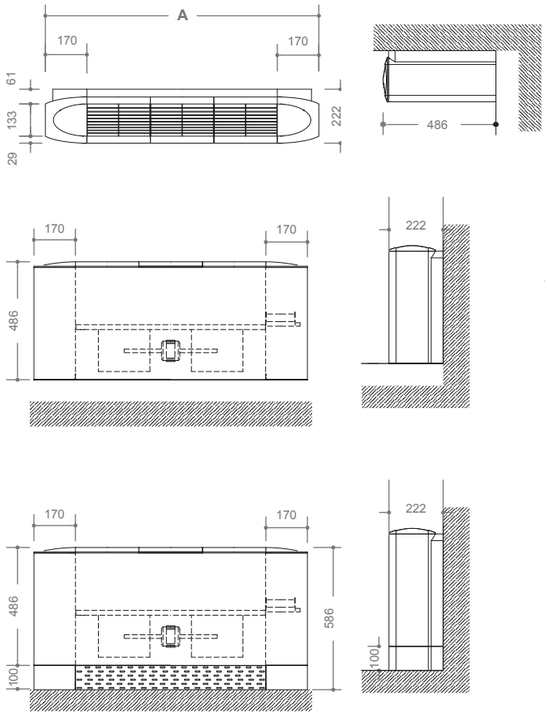

VL - HL

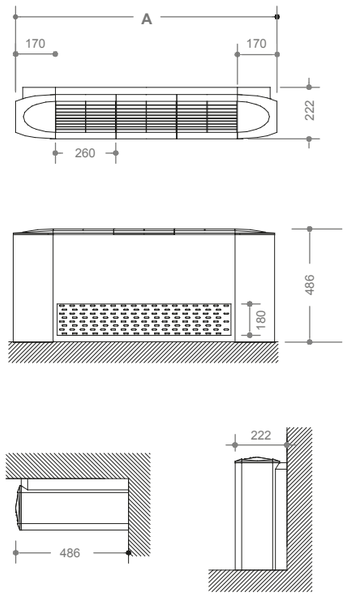

ZEFIRO
WITHOUT CABINET

VC - VE - HC

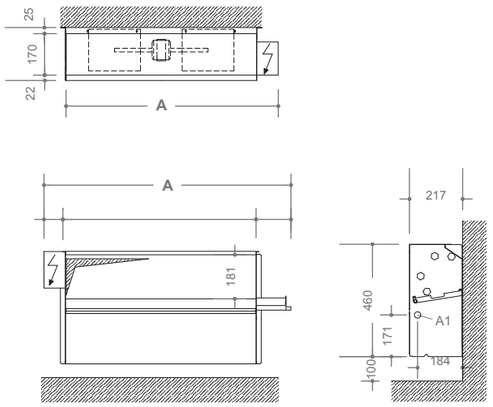

VD - VF - HD

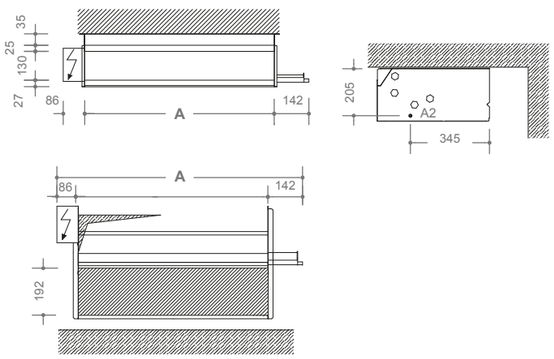

SIZE	VERTICAL *with cabinet* VA - VB - VL A	B*	C	VERTICAL *without cabinet* VC - VD - VF - VE A	B*	C	HORIZONTAL *with cabinet* HA - HB - HL A	B	C*	HORIZONTAL *without cabinet* HC - HD A	B	C	**WEIGHT** *of cabinet* Kg	**WEIGHT** *of cessed version* Kg
308	860	486	222	746	460	217	860	222	486	746	217	460	17	15
316	860	486	222	746	460	217	860	222	486	746	217	460	17	15
320	860	486	222	746	460	217	860	222	486	746	217	460	18	16
628	1120	486	222	1006	460	217	1120	222	486	1006	217	460	18	16
634	1120	486	222	1006	460	217	1120	222	486	1006	217	460	22	19
840	1380	486	222	1266	460	217	1380	222	486	1266	217	460	22	19
847	1380	486	222	1266	460	217	1380	222	486	1266	217	460	23	20
1250	1380	486	222	1266	460	217	1380	222	486	1266	217	460	29	24
1260	1380	486	222	1266	460	217	1380	222	486	1266	217	460	28	23
1575	1640	486	222	1526	460	217	1640	222	486	1526	217	460	29	24
1885	1900	486	222	1786	460	217	1900	222	486	1786	217	460	35	29

*VB/HB: add 100mm for plinths
A = length mm
B = height mm
C = depth mm



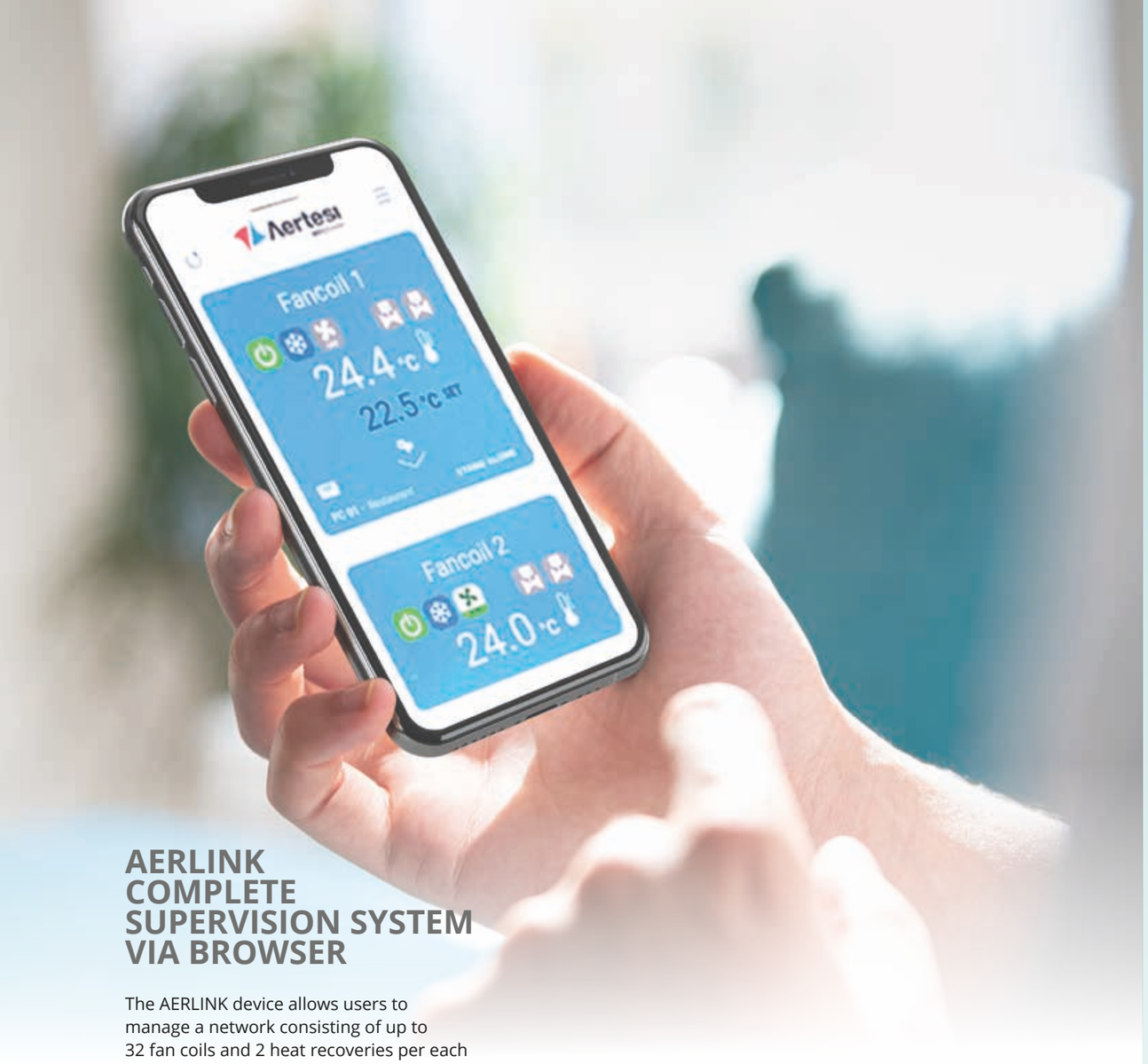

AERLINK COMPLETE SUPERVISION SYSTEM VIA BROWSER

The AERLINK device allows users to manage a network consisting of up to 32 fan coils and 2 heat recoveries per each Web page.
In the case of a higher number of units, additional AERLINK devices can be used, each of them linked to their dedicated web page.
In this way the total number of fan coils that can be managed is virtually unlimited.

It's also possible to associate additional "slave" fan coils to each of the 32 fan coils connected to AERLINK, according to "Master/slave" logics.
In this case the network will display the master and slave units as a unique device.

Aerlink can be also used as converter towards BMS systems that are using communication protocol BACNET/IP or BACNET MS/TP.



SOLUTION FOR HOTEL - FANCOIL WITH USER KEYPAD DISPLAY:

SP3 (motherboard) + BMS-SP3 (module for BMS integration) + TOP3 (keypad display) + SND (water probe)

- CONFIGURATION FOR HOTEL 1

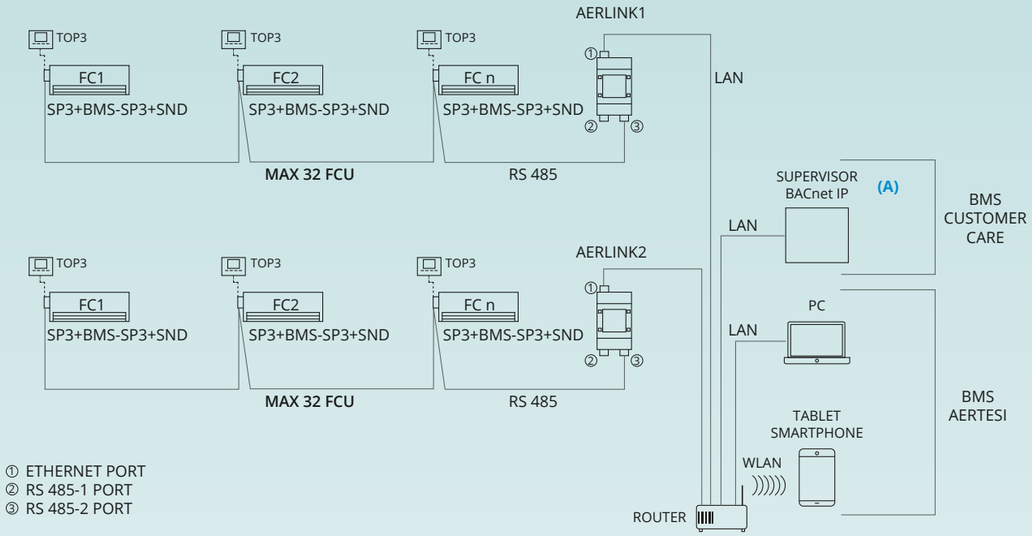

(A) The Customer's supervisor is connected to the LAN network by router. "Bacnet IP" means that the internet protocol and wiring is those of the LAN network.

- CONFIGURATION FOR HOTEL 2

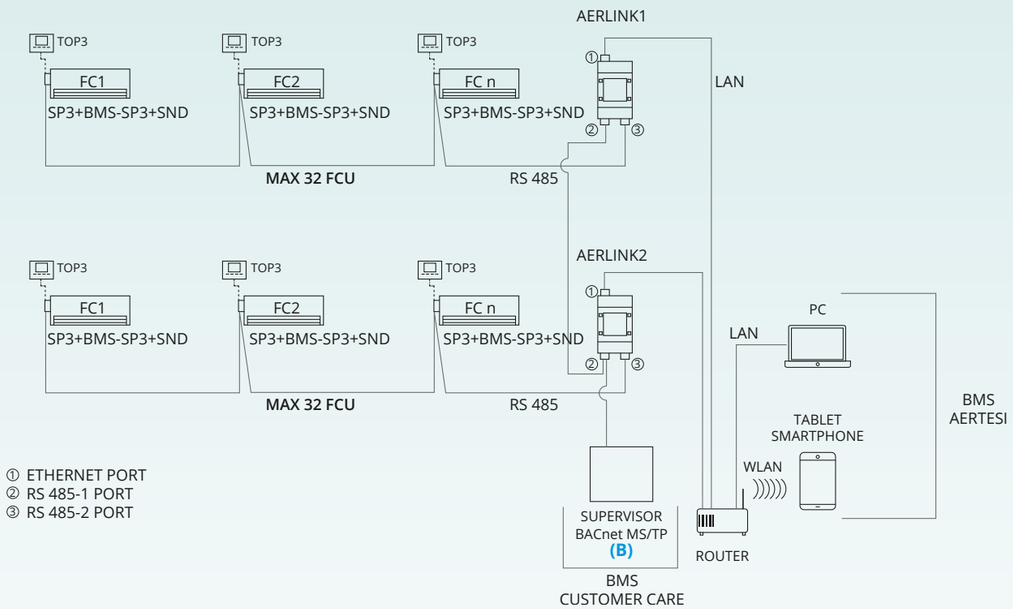

(B) The wiring between Aerlink and BANnet MS/TP is done by clamps connected in RS-485-1 in the door 2, whereas the fancoils are always connected, as in CONFIGURATION 1, to the RS-485-2 network, by the door 3.

SOLUTION FOR OFFICE - FANCOIL WITHOUT USER KEYPAD DISPLAY

(with the same 2 configuration above illustrated)

SP3 (motherboard) + BMS-SP3 (module for BMS integration) + SND-AIR (air probe) + SND (water probe)

ZEFIRO

AC MOTOR
2-PIPE SYSTEM

		316			628			840			1250			1575			1885		
		3 rows			3 rows			3 rows			3 rows			4 rows			4 rows		
SPEED (E)		min	med	max	min	med	max	min	med	max	min	med	max	min	med	max	min	med	max
Air flow	m3/h	174	285	328	280	450	524	399	644	759	653	1029	1148	942	1251	1384	1180	1561	1720
COOLING - air 27°C dry bulb, 19°C wet bulb - water inlet 7°C, outlet 12°C																			
Total capacity (E)	kW	1.02	1.43	1.57	1.55	2.17	2.42	2.43	3.40	3.79	3.44	4.59	4.90	5.46	6.64	7.10	6.99	8.47	9.02
Sensitive capacity (E)	kW	0.75	1.09	1.22	1.14	1.64	1.85	1.76	2.53	2.85	2.56	3.54	3.81	4.03	5.01	5.40	5.12	6.34	6.80
Water flow rate	l/h	177	251	276	271	381	422	425	597	667	603	810	866	959	1167	1248	1222	1483	1582
Δp (water) (E)	kPa	4.2	8.1	9.7	4.1	7.7	9.3	11.2	21	25.9	21.4	37.2	42.1	17	24.8	28.2	29.2	42.2	47.7
HEATING - air 20°C - water inlet 45°C, outlet 40°C																			
Capacity (E)	kW	1.08	1.59	1.76	1.61	2.36	2.65	2.49	3.63	4.13	3.67	5.17	5.60	5.82	7.28	7.87	7.27	9.07	9.78
Water flow rate	l/h	183	269	300	275	401	451	424	616	699	623	874	945	986	1234	1334	1237	1542	1662
Δp (water) (E)	kPa	4.1	8.5	10.5	3.8	7.7	9.6	10.0	20.1	25.5	20.5	38.8	45.0	16.7	25.6	29.8	27.6	42.0	48.5
MOTOR ELECTRIC POWER DRAW																			
Power draw (E)	W	15	28	32	21	36	43	44	73	89	68	116	137	120	146	157	124	163	184
Max power draw	A	0.19			0.24			0.47			0.74			0.85			0.92		
SOUND DATA																			
Sound power (E)	dB(A)	34	42	45	33	40	44	37	46	50	46	57	60	54	61	63	56	61	64
Sound pressure (*)	dB(A)	25	33	36	24	31	35	28	37	41	37	48	51	45	52	54	47	52	55

AC MOTOR
4-PIPE SYSTEM

		316 + B1			628 + B1			840 + B1			1250 + B1			1575 + B1			1885 + B1		
		3 rows + 1			3 rows + 1			3 rows + 1			3 rows + 1			4 rows + 1			4 rows + 1		
SPEED (E)		min	med	max	min	med	max	min	med	max	min	med	max	min	med	max	min	med	max
Air flow	m3/h	174	285	328	280	450	524	399	644	759	653	1029	1148	942	1251	1384	1180	1561	1720
COOLING - air 27°C dry bulb, 19°C wet bulb - water inlet 7°C, outlet 12°C																			
Total capacity (E)	kW	1.02	1.43	1.57	1.55	2.17	2.42	2.43	3.40	3.79	3.44	4.59	4.90	5.46	6.64	7.10	6.99	8.47	9.02
Sensitive capacity (E)	kW	0.75	1.09	1.22	1.14	1.64	1.85	1.76	2.53	2.85	2.56	3.54	3.81	4.03	5.01	5.40	5.12	6.34	6.80
Water flow rate	l/h	177	251	276	271	381	422	425	597	667	603	810	866	959	1167	1248	1222	1483	1582
Δp (water) (E)	kPa	4.2	8.1	9.7	4.1	7.7	9.3	11.2	21	25.9	21.4	37.2	42.1	17	24.8	28.2	29.2	42.2	47.7
HEATING - air 20°C - water inlet 65°C, outlet 55°C																			
Capacity (E)	kW	1.15	1.64	1.81	1.77	2.52	2.81	2.62	3.72	4.19	3.76	5.05	5.43	5.33	6.35	6.78	6.66	7.91	8.44
Water flow rate	l/h	98	140	155	153	216	241	225	318	357	322	430	462	454	540	577	570	676	720
Δp (water) (E)	kPa	3.6	7.2	8.7	10	19.3	23.8	7.3	14.3	17.9	14.6	25.7	29.5	30.0	42.1	47.9	49.0	68.2	77.0
MOTOR ELECTRIC POWER DRAW																			
Power draw (E)	W	15	28	32	21	36	43	44	73	89	68	116	137	120	146	157	124	163	184
Max power draw	A	0.19			0.24			0.47			0.74			0.85			0.92		
SOUND DATA																			
Sound power (E)	dB(A)	34	42	45	33	40	44	37	46	50	46	57	60	54	61	63	56	61	64
Sound pressure (*)	dB(A)	25	33	36	24	31	35	28	37	41	37	48	51	45	52	54	47	52	55

(E): EUROVENT certified performance
(*) = the sound pressure levels are lower than power levels by 9 dB(A) for a 100 m³ space and a reverberation time of 0.5 sec.
The human hearing is more perceivable to frequencies above 2000 Hz while the sound data here declared include all the band middle frequencies. For more details, refer to the technical manual.

EC MOTOR
2-PIPE SYSTEM

		316			628			840			1250			1575			1885		
		3 rows			3 rows			3 rows			3 rows			4 rows			4 rows		
SPEED (E) (DRIVE VOLTAGE)	V	3	4	7	4	5	7	5	7	9	4	5	8	4	6	8	5	6	8
Air flow	m3/h	173	215	334	385	454	593	477	619	749	587	737	1119	827	1111	1404	1191	1373	1697
COOLING - air 27°C dry bulb, 19°C wet bulb - water inlet 7°C, outlet 12°C																			
Total capacity (E)	kW	1.02	1.19	1.61	1.98	2.22	2.65	2.81	3.36	3.82	3.24	3.77	4.89	5.06	6.21	7.23	7.11	7.83	9.00
Sensitive capacity (E)	kW	0.76	0.90	1.26	1.48	1.68	2.05	2.06	2.51	2.88	2.41	2.85	3.81	3.72	4.65	5.52	5.23	5.82	6.80
Water flow rate	l/h	176	207	279	342	383	458	485	582	661	561	654	853	874	1077	1259	1230	1359	1568
Δp (water) (E)	kPa	4.2	5.6	9.9	5.6	7.6	10.9	14.3	20.1	25.4	18.7	24.9	41	14.3	21.3	28.6	29.6	35.8	46.9
HEATING - air 20°C - water inlet 45°C, outlet 40°C																			
Capacity (E)	kW	1.06	1.27	1.77	2.08	2.34	2.88	2.85	3.48	4.03	3.34	3.98	5.43	5.16	6.56	7.89	7.25	8.13	9.63
Water flow rate	l/h	182	218	304	358	403	495	492	598	692	574	683	928	888	1125	1348	1246	1395	1644
Δp (water) (E)	kPa	4.1	5.7	10.8	6.2	7.8	11.5	13.2	19.0	25	17.6	24.4	43.4	13.6	21.5	30.4	28.0	34.7	47.5
MOTOR ELECTRIC POWER DRAW																			
Power draw (E)	W	7	8	13	10	13	19	13	19	27	18	28	74	29	58	101	49	68	117
Max power draw	A	0.19			0.27			0.26			0.67			1.15			1.29		
SOUND DATA																			
Sound power (E)	dB(A)	34	37	45	37	40	46	40	46	50	45	50	59	51	58	63	58	60	64
Sound pressure (*)	dB(A)	25	28	36	28	31	37	31	37	41	36	41	50	42	49	54	49	51	55

EC MOTOR
4-PIPE SYSTEM

		316 + B1			628 + B1			840 + B1			1250 + B1			1575 + B1			1885 + B1		
		3 rows + 1			3 rows + 1			3 rows + 1			3 rows + 1			4 rows + 1			4 rows + 1		
SPEED (E) (DRIVE VOLTAGE)	V	3	4	7	4	5	7	5	7	9	4	5	8	4	6	8	5	6	8
Air flow	m3/h	173	215	334	385	454	593	477	619	749	587	737	1119	827	1111	1404	1191	1373	1697
COOLING - air 27°C dry bulb, 19°C wet bulb - water inlet 7°C, outlet 12°C																			
Total capacity (E)	kW	1.02	1.19	1.61	1.98	2.22	2.65	2.81	3.36	3.82	3.24	3.77	4.89	5.06	6.21	7.23	7.11	7.83	9.00
Sensitive capacity (E)	kW	0.76	0.90	1.26	1.48	1.68	2.05	2.06	2.51	2.88	2.41	2.85	3.81	3.72	4.65	5.52	5.23	5.82	6.80
Water flow rate	l/h	176	207	279	342	383	458	485	582	661	561	654	853	874	1077	1259	1230	1359	1568
Δp (water) (E)	kPa	4.2	5.6	9.9	5.6	7.6	10.9	14.3	20.1	25.4	18.7	24.9	41	14.3	21.3	28.6	29.6	35.8	46.9
HEATING - air 20°C - water inlet 65°C, outlet 55°C																			
Capacity (E)	kW	1.13	1.32	1.81	2.22	2.50	3.03	2.95	3.57	4.09	3.44	4.04	5.28	4.78	5.79	6.78	6.63	7.19	8.31
Water flow rate	l/h	98	114	157	193	217	263	257	310	354	298	350	454	414	500	583	574	621	714
Δp (water) (E)	kPa	3.6	4.8	9	15.6	19.5	28.2	9.4	13.6	17.6	12.6	17.2	28.5	25.1	36.2	48.9	49.7	57.8	75.8
MOTOR ELECTRIC POWER DRAW																			
Power draw (E)	W	7	8	13	10	13	19	13	19	27	18	28	74	29	58	101	49	68	117
Max power draw	A	0.19			0.27			0.26			0.67			1.15			1.29		
SOUND DATA																			
Sound power (E)	dB(A)	34	37	45	37	40	46	40	46	50	45	50	59	51	58	63	58	60	64
Sound pressure (*)	dB(A)	25	28	36	28	31	37	31	37	41	36	41	50	42	49	54	49	51	55

(E): EUROVENT certified performance
(*) = the sound pressure levels are lower than power levels by 9 dB(A) for a 100 m³ space and a reverberation time of 0.5 sec.
The human hearing is more perceivable to frequencies above 2000 Hz while the sound data here declared include all the band middle frequencies. For more details, refer to the technical manual.

The specifications and photos given in this documentation are not binding and are subject to modification without notice.

AER.DP.ZE.GB.005.05.22

tipografia **battagin** s. zenone e. (tv)

Aertesi srl
Viale della Tecnica, 6/a
35026 Conselve (PD) ITALY

t. +39.049.9501109
f. +39.049.9500823

www.aertesi.com
info@aertesi.com